SMD Common Mode Inductor
Size 1513

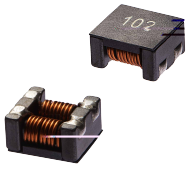

- Chip common mode filter for large current applications.
- Low profile design makes it optimal for surface mounting.
- Operating temperature: -40~+125℃
- Quantity:350 pcs

- Power line noise countermeasure for various electronic equipment
- Noise countermeasure for adapter lines and battery lines or larger electronic equipment such as note PCs and word processors

Dimensions: [mm]

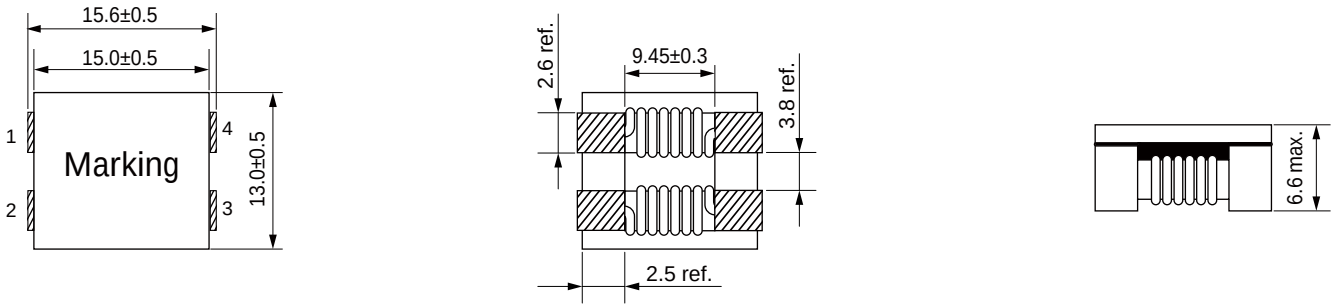

Schematic:

Land Pattern:[mm]

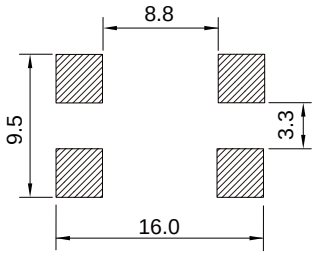

Electrical Properties:

Part No	Impedance @ 100 MHz Min. (Ω)	Impedance @ 100 MHz Typ. (Ω)	DC Resistance Max. (mΩ)	Temperature Rise Current Max. (A)	Rated Volt Max. (V)	IR Min. (MΩ)
SCM1513-301Y	225	300	5.0	13.0	80	10
SCM1513-501Y	400	500	6.0	10.0	80	10
SCM1513-551Y	400	550	6.0	10.0	80	10
SCM1513-601Y	500	600	7.0	10.0	80	10
SCM1513-701Y	500	700	7.0	10.0	80	10
SCM1513-102Y	800	1000	10.0	9.0	80	10
SCM1513-152Y	1200	1500	23.0	5.0	80	10

Temperature Rise Current: The actual value of DC current when the temperature rise is △T=40°C

Soldering Reflow:

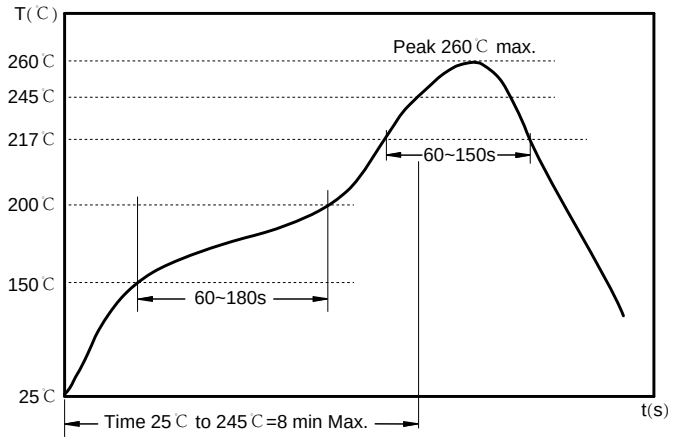

Preheat condition: 150 ~200℃/ 60~180 sec.

Allowed time above 217℃: 60~150 sec.

Max temperature: 260℃.

Max time at max temperature: 10 sec.

Packaging Information:

Tape Dimension:

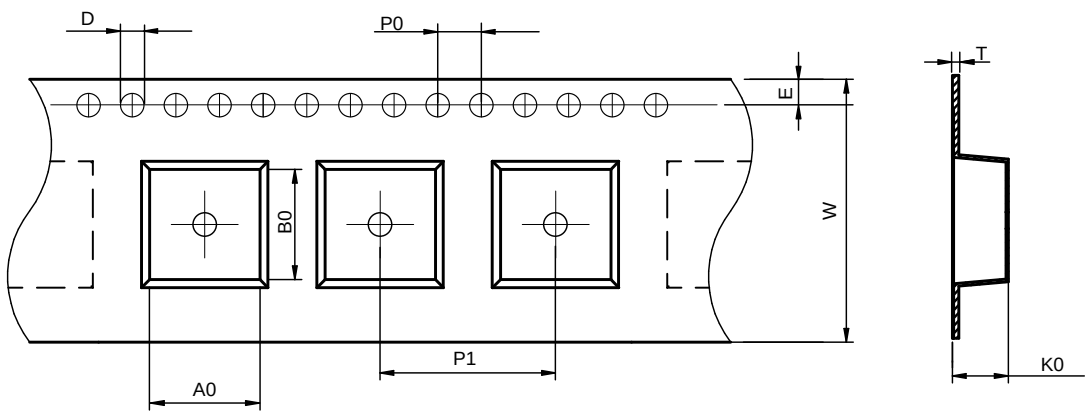

Series	A0 (mm)	B0 (mm)	D (mm)	P0 (mm)	P1 (mm)	W (mm)	K0 (mm)	E (mm)	T (mm)
SCM1513	14.0±0.1	16.0±0.1	1.5±0.1	4.0±0.1	20.0±0.1	24.0±0.3	6.2±0.1	1.75±0.1	0.40±0.05

Product Marking:

Marking	Printing (Impedance)

Peel force of top cover tape:

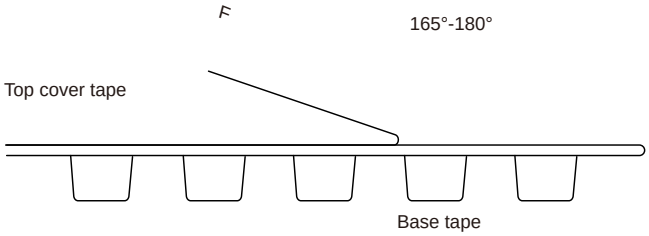

Reel Dimension：[mm]

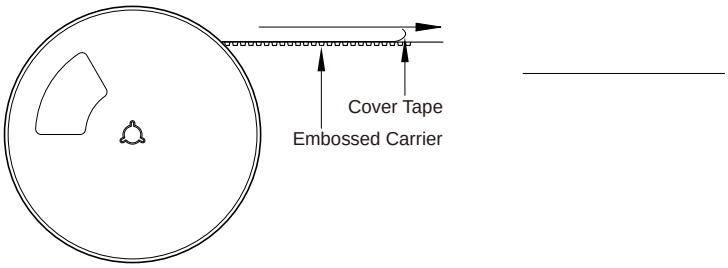

Packaging Quantity:

Cautions and Warnings:

Storage Conditions：

- The storage period is within 12 months after the completion of production. Be sure to follow the storage conditions (temperature: -5 to 35°C, humidity: 75% RH Max).If the storage period elapses, the soldering of the terminal electrodes may deteriorate.The warranty period is one year.
- Product should not be exposed to environment with high temperature, high humidity, dust, corrosive gas and etc.
- Products should be handled with care to avoid damage or contamination from perspiration and skin oils.
- Please always handle products carefully to prevent any damage caused by dropping down or inappropriate removing.

Operation Instructions:

- Self heating (temperature increase) occurs when the power is turned ON, so the tolerance should be sufficient for the set thermal design.
- Before soldering, be sure to preheat components.The preheating temperature should be set so that the temperature difference between the solder temperature and chip temperature does not exceed 150°C.
- Soldering corrections after mounting should be within the range of the conditions determined in the specifications.If overheated, a short circuit, performance deterioration, or lifespan shortening may occur.
- Generally, Koher might not be familiar with either customer's specific application or actual requests as customer does.As a result customer shall be responsible for checking and confirming whether Koher product with the performance described in the product specification is suitable for using in customer's particular application or not.

Conformal coating:

- The inductance value may change due to the high cure stress of the resin used for coating or molding.
- An open circuit may occur due to mechanical stress from the resin, its amount, cured shape, or operating conditions.
- Please exercise careful attention when selecting a resin for the coating or molding process.
- Prior to using the coating resin, please verify that no reliability issues are observed.
- When applying conformal coating for product protection, materials with a high shrinkage rate should be avoided.If such materials must be used, it is recommended to apply silicone around the inductor core in a closed loop to prevent the conformal coating from flowing into or penetrating the windings, thereby avoiding open-circuit failures caused by the coating's thermal stress.